Wireless Personal Communications **18:** 179–192, 2001.

Performance of Frequency-Time MMSE Equalizer for MC-CDMA over Multipath Fading Channel ⋆

CHENYANG LI and SUMIT ROY
Department of Electrical Engineering, University of Washington, P.O. Box 352500, Seattle, WA 98195, U.S.A.
E-mail: {cyli, roy}@ee.washington.edu

Abstract. A cyclic prefix of sufficient length is inserted (longer than the maximum delay spread of the channel) in Multi-Carrier CDMA (MC-CDMA) transmission over dispersive channels such that the channel, as seen by subcarrier, is a simple multiplicative distortion in the frequency domain, that can be compensated for by a one-tap Frequency Equalizer (FE). If, in addition to the spectral inefficiency caused by insertion of the cyclic prefix, the delay spread should exceed the designed prefix length, the FE will attempt to compensate for the mismatched signal model and the system performance will degrade significantly. In this paper, we derive a multi-input, multi-output (MIMO) model for received signal in synchronous MC-CDMA system over a multipath channel. Based on this model, a Frequency-Time MMSE Equalizer (FTE) is proposed. The performance of the FTE is studied as a function of key system parameters, such as prefix length and number of subcarriers, as well as sensitivity to channel estimation errors. The numerical result shows that system performance degradation due to insufficient guard time can be recovered with the FTE; i.e., full spectral efficiency can be achieved at the price of additional receiver complexity.

Keywords: Multi-Carrier CDMA, OFDM, cyclic prefix, MIMO model, MMSE equalizer.

1. Introduction

Of late, modulation techniques that combine Orthogonal Frequency Division Multiplexing (OFDM) [1–3] and Direct Sequence Spread Spectrum (DS-SS) have attracted much attention as potential standards for next-generation (3G) high-rate systems, such as IMT-2000. Several proposals exist in the literature for combining OFDM with DS-SS; for a review, see [4]. In this work, we focus on a Multi-Carrier Code Division Multiple Access (MC-CDMA) [5] method where a user's information sequence is multiplied with a (user-specific) spreading sequence and all chips are transmitted in parallel over overlapping frequency subbands as shown in Figure 1a. Such spreading is termed "frequency-domain" spreading, to contrast it from the normal "time-domain" operation in standard CDMA or DS-SS multiple access. This leads to an increase of the chip duration on each subchannel in MC-CDMA as compared to DS-CDMA for the same transmitted bandwidth, yielding greater robustness against dispersive multipath which is particularly important for high data rate communications.

For an OFDM system, when the multipath spread is a significant fraction of the symbol duration on each subchannel, the use of a cyclic prefix (see [3] and references therein) with a length longer than the delay spread of the channel has been suggested. Thus, Inter Block Interference (IBI) can be absorbed completely and the dispersive channel effect reduced to a complex scaling factor on each subchannel in frequency. Consequently, a simple one-tap frequency equalizer (FE) [3] suffices to combat the channel effect. However, as pointed out in

⋆ This work was supported in part by AFOSR Grant F49620-1-0472.

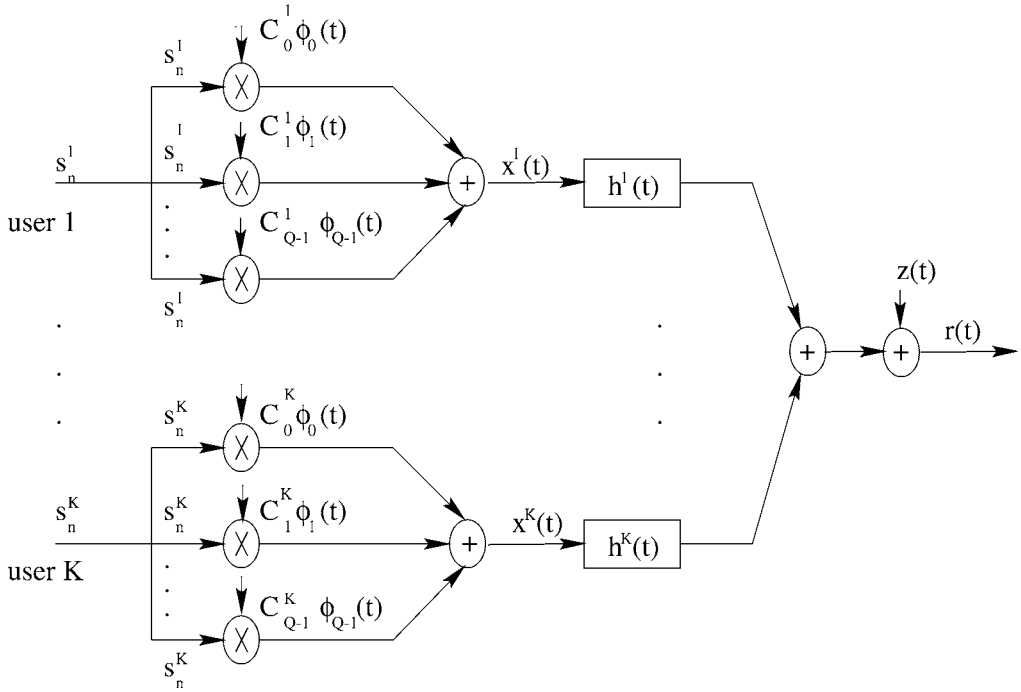

Figure 1a. MC-CDMA System: transmitter.

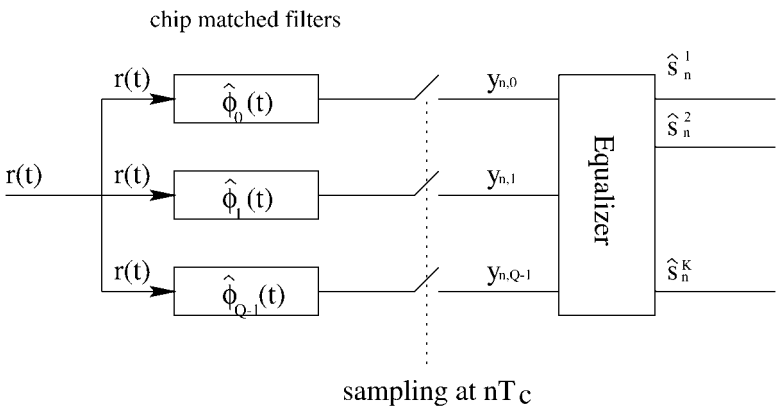

Figure 1b. MC-CDMA System: receiver.

[6], the price paid for using a cyclic prefix is a 10%–25% spectral efficiency loss. Furthermore, the delay spread of some wireless channels shows time variations, thereby complicating the choice of an appropriate prefix length. Should the channel delay spread exceed the designed cyclic prefix length, IBI is not fully eliminated and orthogonality between subcarriers is lost. As a result, the one-tap equalizer attempts to compensate for a mismatched channel model, causing significant performance degradation. Some previous work [7, 8] investigated Coded OFDM (COFDM), i.e., OFDM system with insufficient guard time along with forward error correction coding, as a remedy to this problem.

In this paper, we take a different approach to the recovery of spectral efficiency – using a frequency time equalizer (FTE) based on a multi-input, multi-output (MIMO) model for the received signal that accounts for the existing Inter Symbol Interference (ISI) for any choice of the cyclic prefix length. A similar subchannel equalization method is considered in [9] for the OFDM system. We focus on a synchronous MC-CDMA system and defer (important) issues of symbol timing extraction as they lie outside the present scope.

The paper is organized as follows. Section 2 formulates the synchronous MC-CDMA system with insufficient cyclic prefix as an MIMO model. Then, an FTE using MMSE criteria is developed in Section 3. Numerical results based on output signal-to-interference and noise ratio (SINR) of the equalizer is used as the figure of merit in Section 4 to assess performance. Finally, we conclude the paper in Section 5.

The notation used in this paper follows custom – vectors are denoted by symbols in boldface, $(\cdot)^T$, $(\cdot)^H$ are transpose and conjugate transpose of $(\cdot)$, respectively, and $(\cdot)^{-1}$ and $E(\cdot)$ stand for the matrix inverse and mathematical expectation of $(\cdot)$.

2. Signal Formulation

A baseband equivalent synchronous MC-CDMA system diagram is shown in Figures 1a, b, where the available bandwidth is divided into Q subbands that are equally spaced by $1/T_s$ (T_s is the subcarrier symbol duration). In the MC-CDMA modulation, the number of subcarriers Q equals the length of the spreading sequence and each data symbol is transmitted in parallel using multiple chips over all Q subcarriers.

We assume K active users in the system and that cyclic extension is applied to each symbol. Denote T_g as the duration of cyclic extension, then $T_c = T_g + T_s$ is the effective chip duration on each subcarrier. Thus, in the case of no cyclic extension, the chip and symbol durations are identical.

2.1. Transmitted Signal (Baseband)

The chip waveform at the qth ($q = 0, 1, \ldots, Q-1$) subcarrier is given by:

$$\phi_q(t) = \begin{cases} \frac{1}{\sqrt{T_s}} e^{j2\pi f_q t} & -T_g \le t < T_s,\ f_q = \frac{q}{T_s} \\ 0 & \text{otherwise} \end{cases} . \tag{1}$$

Let s_n^i be the nth transmitted symbol from the ith user, $\mathbf{c}^i = [c_0^i\ c_1^i\ \ldots\ c_{Q-1}^i]^T$ be the user's spreading sequence and E^i be the transmitted energy on each subcarrier. The transmitted energy for one symbol E_s^i will then be QE^i. Hence, the transmitted base band signal for the ith user can be written as

$$x^i(t) = \sqrt{E^i} \sum_{n=-\infty}^{\infty} s_n^i \sum_{q=0}^{Q-1} c_q^i \phi_q(t - nT_c) . \tag{2}$$

2.2. Baseband Received Signal

Assuming a slow-fading multipath channel that is modeled as a linear time-invariant system with impulse response $h^i(t)$, the signal at the receiver front-end input in the presence of AWGN noise $z(t)$ (with zero mean and variance N_0) is

$$r(t) = \sum_{i=1}^{K} \left(\sqrt{E^i} \sum_{n=-\infty}^{\infty} s_n^i \sum_{q=0}^{Q-1} c_q^i \phi_q(t - nT_c) \right) * h^i(t) + z(t) \,. \tag{3}$$

The received signal is first stripped of the cyclic extension and then passed through a bank of chip-matched filters, as shown in Figure 1b, where

$$\hat{\phi}_p(t) = \begin{cases} \frac{1}{\sqrt{T_s}} e^{j2\pi f_p t} & -T_s \le t < 0 \\ 0 & \text{otherwise} \end{cases} \tag{4}$$

it is the chip-matched filter for the pth subchannel, followed by chip rate $(1/T_c)$ sampling. Collecting the samples within the nth transmitted data symbol duration yields a Q-length received vector

$$\mathbf{y}_n = [y_{n,0} \; \ldots \; y_{n,Q-1}]^T \,. \tag{5}$$

It is worth reiterating the well-known fact that the operations of multi-carrier modulation and demodulation in Figures 1a, b can be efficiently implemented using the FFT [1].

The output of the pth chip-matched filter can be explicitly written as

$$y_{n,p} = \sum_{i=1}^{K} \sum_{q=0}^{Q-1} (c_q^i s_n^i * v_{p,q,n}^i) + z_{n,p} \,, \tag{6}$$

where

$$v_{p,q,n-m}^i = \sqrt{E^i} \int_{nT_c}^{nT_c+T_s} g_q^i(t - mT_c) e^{-j2\pi f_p (t - nT_c)} dt \tag{7}$$

$$z_{n,p} = \int_{nT_c}^{nT_c+T_s} z(t) e^{-j2\pi f_p (t - nT_c)} dt \tag{8}$$

$$g_q^i(t) = \phi_q(t) * h^i(t) \,. \tag{9}$$

Defining

$$\mathbf{v}_{p,l}^i = \sqrt{E^i} \begin{bmatrix} v_{p,0,l}^i \\ \vdots \\ v_{p,Q-1,l}^i \end{bmatrix}_{Q \times 1} \tag{10}$$

$$\mathbf{V}_l = \begin{bmatrix} (\mathbf{v}_{0,l}^1)^T & \ldots & (\mathbf{v}_{0,l}^K)^T \\ (\mathbf{v}_{Q-1,l}^1)^T & \ldots & (\mathbf{v}_{Q-1,l}^K)^T \end{bmatrix}_{Q \times KQ} \tag{11}$$

$$\mathbf{s}_n = [s_n^1 \ \ldots \ s_n^K]^T_{K\times 1} \tag{12}$$

$$\mathbf{C} = \begin{bmatrix} \mathbf{c}^1 & & \\ & \ddots & \\ & & \mathbf{c}^K \end{bmatrix}_{KQ\times K} . \tag{13}$$

Let L be such that for $n > L$, $v^i_{p,q,n}$ is negligible for any p, q and i; then $\mathbf{y}_n$ can be expressed as

$$\mathbf{y}_n = \sum_{l=0}^{L} \mathbf{V}_l \mathbf{C}\mathbf{s}_{n-l} + \mathbf{z}_n \,, \tag{14}$$

where $\mathbf{z}_n$ is a Gaussian noise vector, whose uncorrelated elements have zero mean and variance N_0.

2.3. Equivalent Discrete-Time Model for Multipath Channel

A discrete-time frequency-selective fading channel [10] is considered. The channel impulse response consists of M resolved (echo) paths and each path is characterized by a random (complex) amplitude $\alpha_m(t)$, i.e.,

$$h(\tau, t) = \sum_{m=1}^{M} \alpha_m(t)\delta(\tau - \tau_m) \,, \tag{15}$$

where τ_m is a multiple of $1/BW$ (BW is the signal bandwidth, equal to Q/T_s for the MC-CDMA system). In this paper, in order to highlight the impact of an insufficient cyclic prefix, we exclusively consider a two-path slow-fading model (i.e., $\alpha_m(t)$'s are constant), where the delay of the first path $\tau_m \leq T_g$, and that of the second $T_g < \tau_m < T_s$, following [9] and [11]. Thus, the channel impulse response for the ith user can be expressed as

$$h^i(t) = \alpha_0^i \delta(t - \tau_0^i) + \alpha_1^i \delta(t - \tau_1^i) \,. \tag{16}$$

Note that the presence of the longer delay path causes interference between adjacent symbols, i.e., $\mathbf{V}_0$ and $\mathbf{V}_1$ are non-zero in Equation (14). Consequently, defining the effective *excess delay* $\beta_1^i = \frac{\tau_1^i - T_g}{T_s}$, after some algebra, Equation (14) becomes

$$\mathbf{y}_n = \mathbf{V}_0 \mathbf{C}\mathbf{s}_n + \mathbf{V}_1 \mathbf{C}\mathbf{s}_{n-1} + \mathbf{z}_n \tag{17}$$

and

$$\mathbf{v}^i_{p,0} = \sqrt{E^i} \begin{bmatrix} 0 \\ \vdots \\ 0 \\ \alpha_0^i e^{-j2\pi f_p \tau_0^i} + \alpha_1^i e^{-j2\pi f_p \tau_1^i} \\ 0 \\ \vdots \\ 0 \end{bmatrix} - \sqrt{E^i} \begin{bmatrix} \alpha_1^i e^{-j2\pi f_0 \tau_1^i} e^{j\pi(0-p)\beta_1^i} \frac{sin[\pi(0-p)\beta_1^i]}{\pi(0-p)} \\ \vdots \\ \alpha_1^i e^{-j2\pi f_{Q-1} \tau_1^i} e^{j\pi(Q-1-p)\beta_1^i} \frac{sin[\pi(Q-1-p)\beta_1^i]}{\pi(Q-1-p)} \end{bmatrix} \tag{18}$$

$$\mathbf{v}_{p,1}^{i} = \sqrt{E^i} \begin{bmatrix} \alpha_1^i e^{-j2\pi\cdot 0\cdot\beta_1^i} e^{j\pi(0-p)\beta_1^i} \frac{sin[\pi(0-p)\beta_1^i]}{\pi(0-p)} \\ \vdots \\ \alpha_1^i e^{-j2\pi(Q-1)\beta_1^i} e^{j\pi(Q-1-p)\beta_1^i} \frac{sin[\pi(Q-1-p)\beta_1^i]}{\pi(Q-1-p)} \end{bmatrix} . \tag{19}$$

Note that the second term in Equation (18) represents the Inter Channel Interference (ICI) for a user of interest, while the presence of $\mathbf{v}_{p,1}^i$ reflects the combined ISI and Multiple Access Interference (MAI), due to the loss of subcarrier orthogonality. From the expression for $\mathbf{v}_{p,0}^i$ and $\mathbf{v}_{p,1}^i$, it can be seen that the net interference is related non-linearly to the excess delay parameter β_1^i. Additionally, the primary interference comes from adjacent subchannels.

It is worth pointing out that when the cyclic prefix exceeds the maximum delay spread, ISI is eliminated and subcarrier orthogonality holds. Hence, Equation (17) reduces to

$$\mathbf{y}_n = \mathbf{V}_0\mathbf{C}\mathbf{s}_n + \mathbf{z}_n \tag{20}$$

with

$$\mathbf{v}_{p,0}^i = \sqrt{E^i}[0 \ \ldots \ 0 \ \alpha_0^i e^{-j2\pi f_p \tau_0^i} \ 0 \ \ldots \ 0]^T . \tag{21}$$

where the structure of $\mathbf{v}_{p,0}^i$ reflects pure scaling due to the channel.

3. Minimum Mean-Squared Error (MMSE) Detector

In this section, we describe the joint MMSE equalizer based on Equation (17). To differentiate it from the one-tap Frequency Equalizer (FE) [3], the new equalizer is named the Frequency-Time MMSE Equalizer(FTE) to underscore the fact that equalization is effected in both time and frequency domains.

Rewrite Equation (17) as

$$\mathbf{y}_n = \mathbf{P}_0\mathbf{s}_n + \mathbf{P}_1\mathbf{s}_{n-1} + \mathbf{z}_n , \tag{22}$$

where

$$\mathbf{P}_0 = \mathbf{V}_0\mathbf{C} = [\mathbf{p}_{0,1} \ \ldots \ \mathbf{p}_{0,i} \ \ldots \ \mathbf{p}_{0,K}]_{Q\times K} \tag{23}$$

$$\mathbf{P}_1 = \mathbf{V}_1\mathbf{C} = [\mathbf{p}_{1,1} \ \ldots \ \mathbf{p}_{1,i} \ \ldots \ \mathbf{p}_{1,K}]_{Q\times K} . \tag{24}$$

An equivalent discrete-time model for $\mathbf{y}_n$ is illustrated in Figure 2a.

Assume data symbols from each user are i.i.d. sequences with zero mean and unity variance. For a symmetric (two-sided) FTE of order $2N+1$, the optimal equalizer coefficients $\mathbf{w}_k$ for the kth user (see Figure 2b for the structure of the proposed joint MMSE detector), which minimize the mean square error between the transmitted symbol s_n^k and its estimate $\hat{s}_n^k$, are determined by solving

$$\mathbf{w}_k = \arg\min_{\mathbf{w}} E(\|\hat{s}_n^k - s_n^k\|^2) , \tag{25}$$

where

$$\hat{s}_n^k = \mathbf{w}_k^H \mathbf{Y}_n , \tag{26}$$

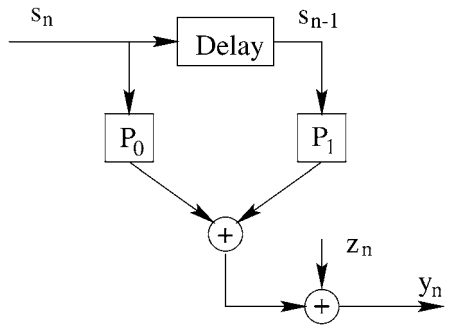

Figure 2a. Equivalent discrete time MIMO model.

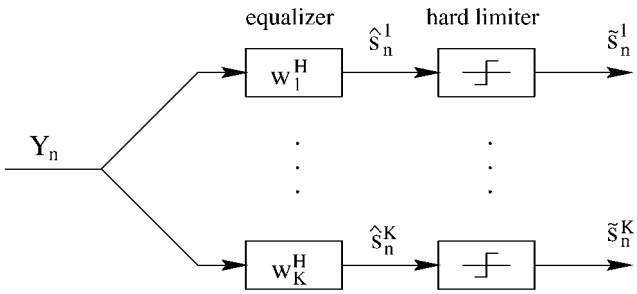

Figure 2b. Joint frequency-time MMSE detector.

and the $(2N+1)Q$-dimension vector $\mathbf{Y}_n$ is

$$\mathbf{Y}_n = [\mathbf{y}_{n-N}^T \ \cdots \ \mathbf{y}_n^T \ \cdots \ \mathbf{y}_{n+N}^T]^T \tag{27}$$

$$= \begin{bmatrix} \mathbf{P}_1 & \mathbf{P}_0 & & & \\ & \mathbf{P}_1 & \mathbf{P}_0 & & \\ & & \ddots & \ddots & \\ & & & \mathbf{P}_1 & \mathbf{P}_0 \end{bmatrix} \begin{bmatrix} \mathbf{s}_{n-N-1} \\ \vdots \\ \mathbf{s}_n \\ \vdots \\ \mathbf{s}_{n+N} \end{bmatrix}. \tag{28}$$

Defining $\mathbf{R}_{\mathbf{YY}^H} = E[\mathbf{Y}_n \mathbf{Y}_n^H]$ and $\mathbf{r}_{s\mathbf{Y}^H} = E[s_n^k \mathbf{Y}_n^H]$, by the orthogonality principle [12],

$$\mathbf{w}_k^H = \mathbf{r}_{s\mathbf{Y}^H} \mathbf{R}_{\mathbf{YY}^H}^{-1}. \tag{29}$$

Let the $(2N+1)Q$ vector $\mathbf{w}_k$ be

$$\mathbf{w}_k = [\mathbf{w}_{k,-N}^T \ \cdots \ \mathbf{w}_{k,0}^T \ \cdots \ \mathbf{w}_{k,N}^T]^T, \tag{30}$$

then $\hat{s}_n^k$ can be rewritten, i.e.,

$$\hat{s}_n^k = (\mathbf{w}_{k,0}^H \mathbf{p}_{0,k} + \mathbf{w}_{k,1}^H \mathbf{p}_{1,k}) s_n^k + \left[\sum_{j=-N, j\neq 0}^{N} \mathbf{w}_{k,j}^H \mathbf{p}_{0,k} s_n^k + \sum_{j=-N, j\neq 1}^{N} \mathbf{w}_{k,j}^H \mathbf{p}_{1,k} s_{n-1}^k + \sum_{j=-N}^{N} \sum_{i=1, i\neq k}^{K} \mathbf{w}_{i,j}^H (\mathbf{p}_{0,i} s_n^i + \mathbf{p}_{1,i} s_{n-1}^i) \right] + \sum_{j=-N}^{N} \mathbf{w}_{k,j}^H \mathbf{z}_j \,. \tag{31}$$

In the above expression, the first term is the component consisting of the symbol of interest, while the other two represent the residual interference (including ISI, ICI and MAI) and the noise component, respectively, after equalization.

The average SINR at the MMSE equalizer output over all users will be used as the figure of merit for investigating the impact of the cyclic prefix length on the FTE, i.e.,

$$\mathrm{SINR} = \frac{\sum_{k=1}^{K} \mathrm{SINR}_k}{K} \,, \tag{32}$$

where the kth user's SINR is given by

$$\mathrm{SINR}_k = \frac{E_k}{E_I} \tag{33}$$

$$E_k = \|\mathbf{w}_{k,0}^H \mathbf{P}_{0,k} + \mathbf{w}_{k,1}^H \mathbf{P}_{1,k}\|^2 \tag{34}$$

$$E_I = \mathbf{w}_k^H \mathbf{R}_{\mathbf{Y}\mathbf{Y}^H} \mathbf{w}_k - E_k \,. \tag{35}$$

E_k is the power of the desired symbol at the equalizer output, while E_I is the power of the residual interference and the noise.

4. Numerical Results

The output SINR of the proposed FTE (Equation (33)) is computed for varying system parameters such as cyclic prefix length, input SNR, number of subcarriers, and the order of the equalizer. As a fair baseline for comparison with FE, the system bandwidth $\frac{Q}{T_s}$ is assumed to be identical for both cases. We consider MC-CDMA system designs with $Q = 8, 16, 32$ subcarriers such that the symbol duration of the 16 (32) subcarrier system is double (four times) that of 8 subcarrier system ($T_{s,Q=16} = 2T_{s,Q=8}$, $T_{s,Q=32} = 4T_{s,Q=8}$) to yield an identical system bandwidth. For spreading, 8, 16, 32-length Hadamard (orthogonal) codes are used at the transmitter on BPSK-modulated symbols. The cyclic prefix length is normalized by T_s and varied from zero to the maximum value $0.5\,T_{s,Q=8}$. In the two-path slow-fading channel model $h^i(t) = \alpha_0^i \delta(t - \tau_0^i) + \alpha_1^i \delta(t - \tau_1^i)$, the path coefficients α_m^i, $(m = 1, 2)$ are complex Gaussian random variables with zero mean and unity variance (we are thus implicitly using a uniform power delay profile). Also, α_m^i is normalized so that the total power of the channel is one. The first path delay τ_0^i is assumed to be uniformly distributed in $[0, T_g]$ and the second τ_1^i uniformly distributed in $(T_g, 0.5T_{s,Q=8}]$; this allows us to consider both insufficient and sufficient prefix cases as the (chosen) cyclic prefix length is changed from zero to $0.5T_{s,Q=8}$. All SINR results

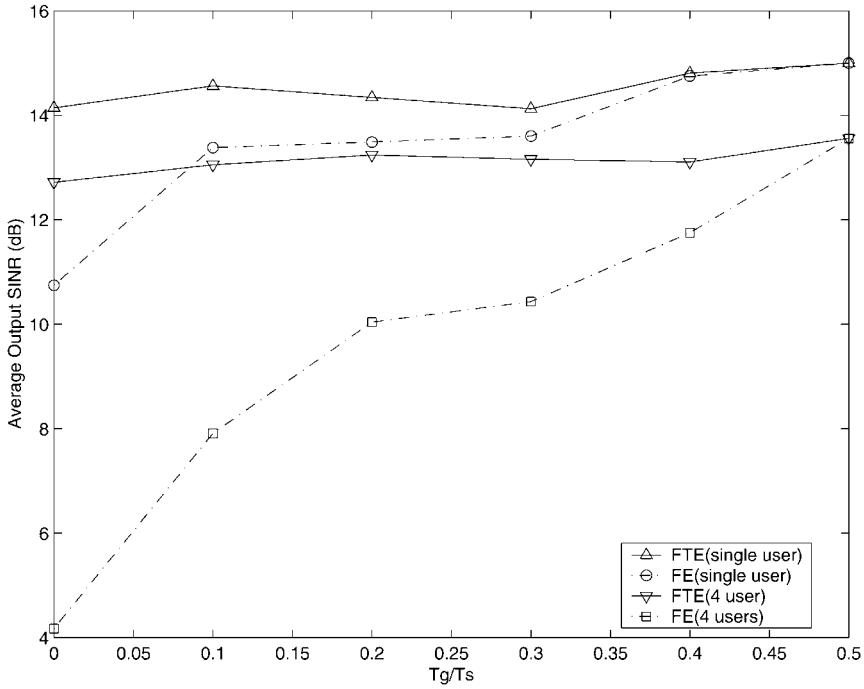

Figure 3. SINR of FTE vs. prefix length for both single- and four-user systems. SINR of FE is shown as baseline for FTE performance. All users have equal transmitting power (15 dB); equalizer order $(2N + 1)$ is 5; $Q = 8$.

are obtained by averaging over 300 realizations of α_0^i, α_1^i and τ_0^i, τ_1^i to average out the channel effect on the performance.

Note that implementing the MMSE equalizer requires channel information – we first evaluate system performance based on the assumption of ideal channel information, and subsequently highlight the impact of channel estimation (as may be obtained in practice via pilot symbols).

4.1. FTE Performance on Ideal Channel Information

First we investigate the FTE performance potential by assuming that ideal channel information is available. Figure 3 illustrates the SINR of both FTE and FE vs. cyclic prefix length T_g for single and four users with $Q = 8$. All users have identical transmitting power for an input SNR equal to 15 dB, where SNR is defined as $\frac{E_s^i}{N_0}$. In this and the following examples, the equalizer order $2N + 1 = 5$ is considered since higher orders do not give any further improvement in output SINR for the FTE. When the cyclic prefix exceeds the maximal delay spread ($T_g = 0.5T_{s,Q=8}$), FTE reduces to FE; thus the FTE and the FE have identical output SINRs as expected. As the prefix length decreases, the output SINR of FE degrades quickly especially for the four-user case. However, the SINR of FTE is much less sensitive to the prefix length (for single user and four users), i.e., the SINR difference for $\frac{T_g}{T_{s,Q=8}} = 0$ and $\frac{T_g}{T_{s,Q=8}} = 0.5$ is approximately 1 dB. This shows that FTE effectively compensates for the ISI, ICI, and MAI, yielding satisfactory performance at full spectral efficiency.

Next, we increase the number of subcarriers and correspondingly reduce the data rate to keep the bandwidth unchanged. Due to the increase of symbol duration T_s, channel delay

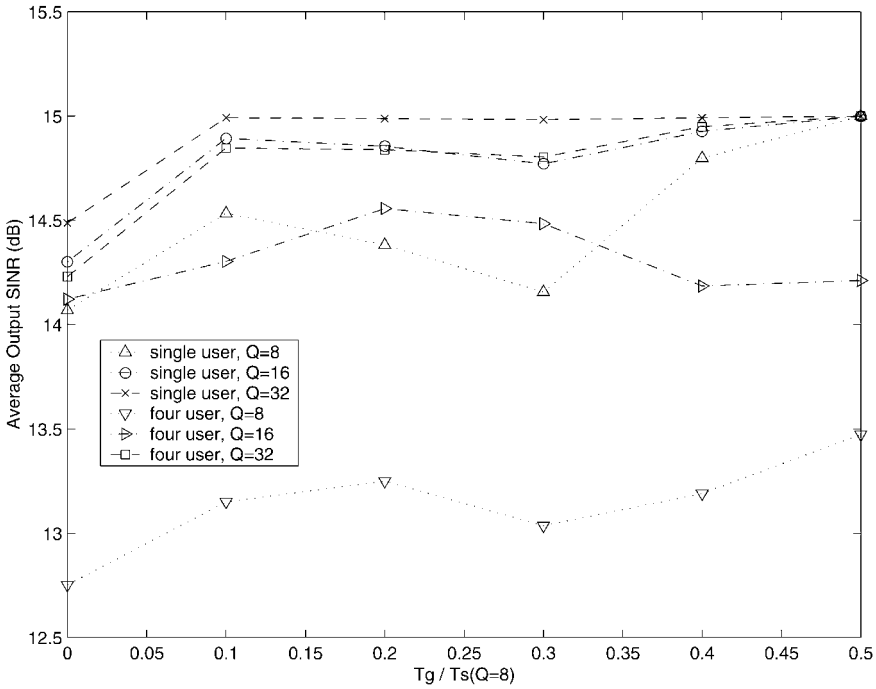

Figure 4. SINR of FTE vs. prefix length for systems with different numbers of subcarriers (8, 16, and 32). All users have equal transmitting power (15 dB); equalizer order $(2N + 1)$ is 5.

spread is less significant (since the maximum delay $0.5T_{s,Q=8}$ is set to be constant); thus, the SINR increases with Q, the number of subcarriers in the system. Moreover, a larger T_s implies closer approximation to orthogonality between subcarriers meaning that ICI and MAI are less severe; therefore, the performance gap between single and multiple users reduces. The FTE performance for $Q = 8$, $Q = 16$, and $Q = 32$ in Figure 4 verifies this. $Q = 64$ is not shown since there is no further SINR improvement over $Q = 32$. Note that the price paid for the SINR gain is the decreased data rate and increased complexity.

We also examine the FTE performance for a multi-user system when the users' powers are not equal. Figure 5 considers two users with 10 dB and 15 dB SNR. Similar to the equal power situation above, the SINR sensitivity to the prefix length is approximately 1 dB for both users.

4.2. Impact of Channel Estimation Error on FTE

The impact of channel estimation error on FTE performance is investigated based on modeling errors in the path gains α_1 and α_2 as follows. The estimate $\hat{\alpha}_i$ is given by $\hat{\alpha}_i = \alpha_i + \delta_i$, where the error term is assumed to be a (zero mean) complex Gaussian random variable with variance σ_δ^2. We assume that rough synchronization of the path delays τ_0 and τ_1 (i.e., the timing estimation of the order of T_s/Q) is achieved; the impact of fine (within T_s/Q) timing is not addressed, hence the performance results presented can be thought of as upper bounds. Figure 6 shows FTE performance vs. different error variance ($\sigma_\delta^2 = 0$, 0.01, 0.05, and 0.1, respectively) for MC-CDMA with $Q = 8, 16, 32$. As can be seen, moderate channel estimate error ($\sigma_\delta^2 = 0.01$) results in very small SINR degradation – 0.2 dB for $Q = 8$ and 0.1 dB for $Q = 16$ compared to perfect channel information; even when estimate error variance is as high as 0.1, the performance drop from the ideal is less than 2 dB for $Q = 8$ (or 1dB for

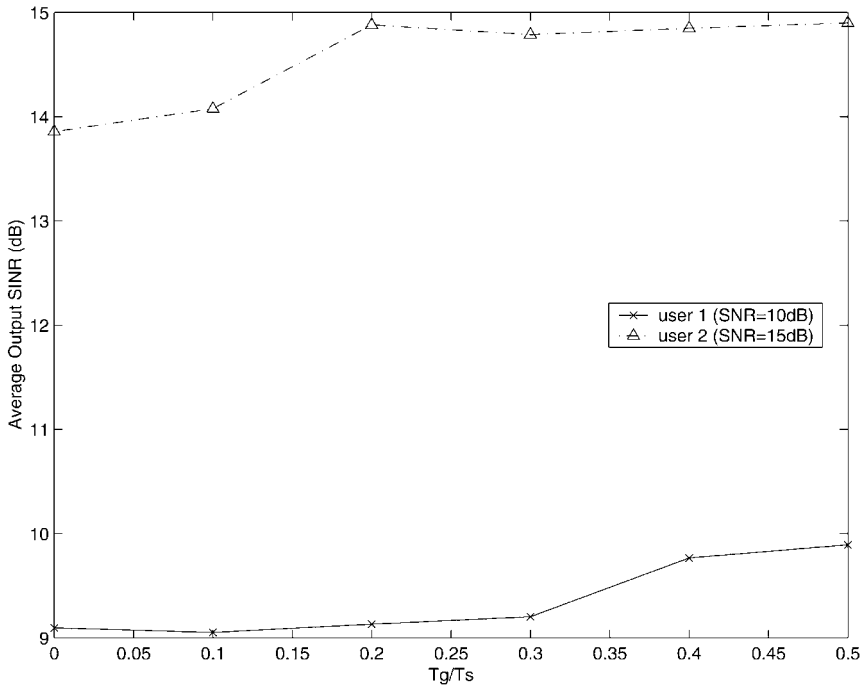

Figure 5. SINR of FTE vs. prefix length for a two-user system. Two users use different transmitting powers: one with 10 dB, the other with 15 dB; order of the equalizer $(2N + 1)$ is 5; $Q = 8$.

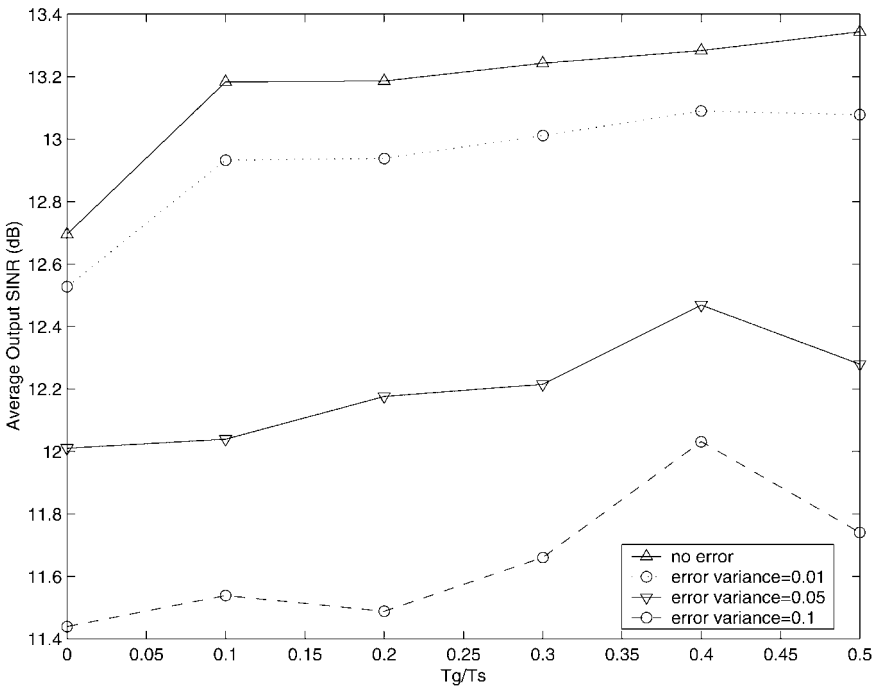

Figure 6a. Channel estimation error impact on FTE performance. Four active users with equal transmitting power, $Q = 8$.

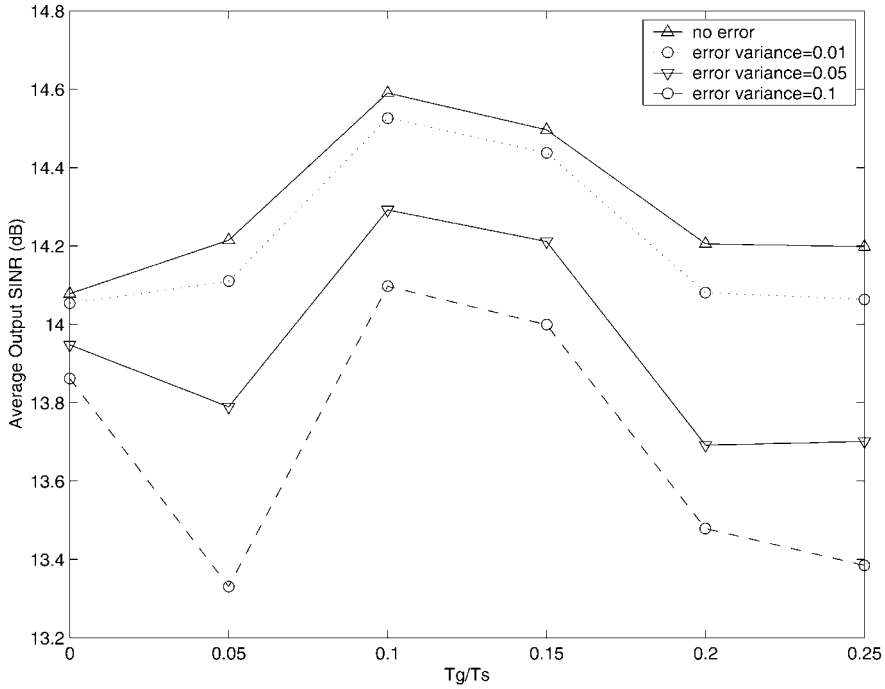

Figure 6b. Channel estimation error impact on FTE performance. Four active users with equal transmitting power, $Q = 16$.

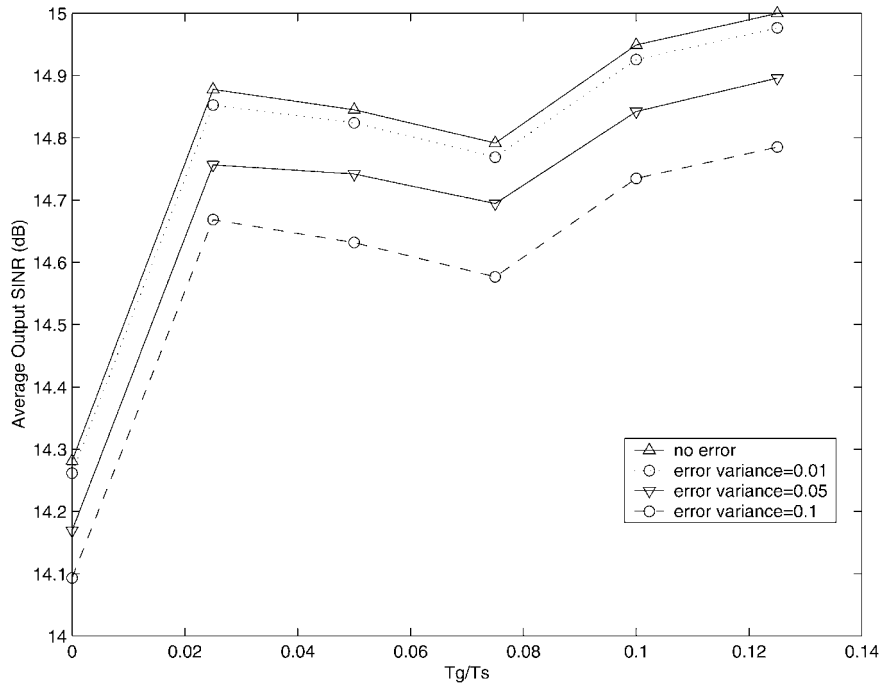

Figure 6c. Channel estimation error impact on FTE performance. Four active users with equal transmitting power, $Q = 32$.

$Q = 16$ and 0.4 dB for $Q = 32$). In addition, the increase of Q gives FTE better tolerance to the channel estimation error.

5. Conclusion

This paper considered an MC-CDMA system with an insufficient cyclic prefix operating over a slow multipath fading channel. A MIMO model using guard time as a parameter was derived. It was shown by numerical results that by employing a Frequency-Time MMSE equalizer, performance degradation due to the frequency equalizer with insufficient cyclic prefix can be restored. Therefore, cyclic prefix/guard time can be abandoned or suitably reduced to achieve higher spectral efficiency at the cost of the complexity of a frequency-time equalizer.

Acknowledgements

The authors would like to thank the anonymous reviewers for their helpful comments.

References

1. L.J. Cimini, Jr., "Analysis and Simulation of a Digital and Mobile Channel Using Orthogonal Frequency Division Multiplexing", *IEEE Trans. on Commun.*, Vol. 33, No. 7, pp. 665–675, 1985.
2. J.A.C. Bingham, "Multicarrier Modulations for Data Transmission: An Idea Whose Time Has Come", *IEEE Commun. Mag.*, Vol. 28, No. 5, pp. 5–14, 1990.
3. H. Sari, G. Karam and I. Jeanclaude, "Transmission Techniques for Digital Terrestrial TV Broadcasting", *IEEE Commun. Mag.*, Vol. 33, No. 2, pp. 100–109, 1995.
4. S. Hara and R. Prasad, "Overview of Multicarrier CDMA", *IEEE Communication Magazine*, Vol. 35, No. 12, pp. 126–133, 1997.
5. N. Yee, J-P. Linnartz and G. Fettweis, "Multicarrier CDMA in Indoor Wireless Radio Networks", in *Proc. of IEEE PIMRC93*, pp. 109–113.
6. W.Y. Zou and Y. Wu, "COFDM: An Overview", *IEEE Trans. Broadcasting*, Vol. 41, pp. 1–8, 1995.
7. R.F. Ormondroyd and J.J. Maxey, "Comparison of Time Guard-Band and Coding Strategies for OFDM Digital Cellular Radio in Multipath Fading", in *IEEE 47th Vehicular Technology Conference. Technology in Motion*, New York, NY, U.S.A., 1997, Vol. 2, pp. 850–854.
8. A.G. Burr, "Performance Analysis of Broadband Transmission on a Fading Multipath Channel", *Wireless Personal Communications*, Vol. 10, No. 1, pp. 3–17, 1999.
9. E. Viterbo and K. Fazel, "How to Combat Long Echoes in OFDM Transmission Schemes: Subchannel Equalization or More Powerful Channel Coding", in *GLOBECOMM '95*, pp. 2069–2074.
10. K. Pahlavan and A.H. Levesque, *Wireless Information Networks*, Chapter 6, John Wiley and Sons, 1995.
11. L. Vandendorpe and O. Van De Wiel, "Performance Analysis of Linear MIMO Equalizers for Multitone DS/SS Systems in Multipath Channels", *Wireless Personal Communications*, Vol. 2, pp. 145–165, 1995.
12. J.G. Proakis, *Digital Communications*, 3rd edition, McGraw-Hill, 1995.

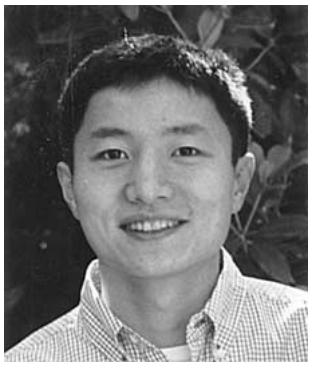

Chengyang Li received the B.S. and M.S. degrees (in electrical engineering) from the University of Electronic Science and Technology of China (Chengdu, China), in 1992 and 1995 respectively. He is currently working toward the Ph.D. degree at the University of Washington.

Since 1999, he has been a Research Assistant at the FUndamentals of Networking LABoratory (FUNLAB), University of Washington. His research interests include OFDM/Multi-Carrier CDMA systems, multiuser communications, and wireless LAN.

Sumit Roy received the B.Tech. degree from the Indian Institute of Technology (Kanpur) in 1983 his M.S. and Ph.D. degrees from the University of California (Santa Barbara), in 1985 and 1988, respectively, all in Electrical Engineering. He received an M.A. in Statistics and Applied Probability in 1988. His previous academic appointments were at the Moore School of Electrical Engineering, University of Pennsylvania, and at the University of Texas, San Antonio. He is presently an Associate Professor of Electrical Engineering, University of Washington, where his research interests include analysis/design of communication systems/networks, with an emphasis on next generation mobile/wireless networks. His activities for the IEEE Communications Society includes membership of several technical committees, and he presently serves as an Editor for the Wireless Series of the Journal for Selected Areas in Communications.